THE INSTRUCTIONAL CALCULUS AND DIRECT INSTRUCTION IN INTELLIGENT TUTORING SYSTEMS

John S. Sfondilias
Global Information Systems Technology, Inc.
1800 Woodfield Drive
Savoy, Illinois 61874
and
Martin A. Siegel
University of Illinois
Urbana, Illinois

This research was funded by the U.S. Army (contract number: DAAH01-86-C-1005). The views and opinions expressed in this paper are those of the authors, and do not necessarily represent those of the U.S. Army. Requests for reprints should be sent to John S. Sfondilias, Global Information Systems Technology, Inc., 1800 Woodfield Drive, Savoy, Illinois 61874

Abstract

Global Information Systems Technology, Inc., is developing an expert teacher model for intelligent tutoring that provides mastery instruction. Instructional knowledge and domain knowledge are represented separately in the intelligent tutoring system. To accomplish this, we first perform a logical analysis of domain knowledge, and classify it according to a taxonomy of cognitive knowledge. Then, we identify optimal communications rules for each knowledge structure. Logical analysis of cognitive knowledge defines the relationship between domain and instructional knowledge, which provides a solution to the problem of how domain and instructional knowledge interact in an expert system. We represent expert teacher knowledge by building a communication rule model for each knowledge structure identified in the analysis.

INTRODUCTION

This research was funded by the U.S. Army under a contract for exploratory development in embedded intelligent tutoring systems. The Army has identified a need for maintaining the skills of air defense weapon systems operators in the field. The initial institutional training that weapon systems operators receive is satisfactory. However, weapon systems operators in the field must be able to practice their skills to remain proficient.

An embedded simulator in the weapon system can provide this practice. A human instructor is required to select appropriate simulations, and provide verbal feedback to operators on their performance. There are two problems with this: a) there are not enough human instructors to adequately staff weapon systems sites, and b) the instruction (simulation selection and verbal feedback) is not standardized. The instructional problem addressed in this research is: how do we maintain the skills of weapon systems operators?

The Army is exploring the feasibility of implementing an embedded intelligent tutor, such as the "Intelligent Operator Assistant Functional Model" (see Figure 1). An embedded intelligent tutoring system could provide consistent, effective instruction at many weapon systems sites. Global Information Systems Technology, Inc. (GIST) was contracted to develop effective tutoring strategies (see Figure 1, box G) for the system.

During the initial phase of this research, GIST developed a prototype intelligent tutoring system that demonstrated the feasibility of implementing Direct Instruction (Englemann & Carnine, 1982) strategies in simulation training. During the next phase of research, GIST will develop expert teacher models for teaching simulations on an actual weapon system.

INTELLIGENT TUTORING SYSTEMS

In various research efforts, artificial intelligence techniques have been employed to represent domain knowledge and models of the student. For example, MYCIN (Shortliffe, 1976) was one of the first expert systems to model a domain expert (medical diagnosis) successfully. In BUGGY, Brown and Burton (1978) developed a "deep-structure model" of a student's misconceptions in basic mathematical skills. There have been few systematic efforts, however, to develop expert teacher models.

Buchanan and Shortliffe (1984) state that intelligent tutoring systems researchers almost invariably retreat from the question of "How shall we teach?" (p. 456). In our research, we build an intelligent tutoring system that separately represents expert knowledge, and expert teacher knowledge. We treat expert teacher knowledge as the instructional knowledge domain.

Previous attempts to provide expert tutoring have implemented a variety of methods. For example, GUIDON (Clancey, 1979) added a "case method" tutor to MYCIN's medical diagnosis production rules and tables. Meno-tutor (Woolf & McDonald, 1984) implemented a "discourse management network." In many of these studies, the tutoring method or strategy was designed by the researchers.

In our intelligent tutoring system, we developed an expert teacher model based on a well-defined theory of instruction. Direct Instruction provides rules and strategies for a comprehensive mastery-learning model of instruction. We selected a mastery-learning model of instruction because of the nature of the instructional problem (skill maintenance).

INTELLIGENT OPERATOR ASSISTANT
FUNCTIONAL MODEL

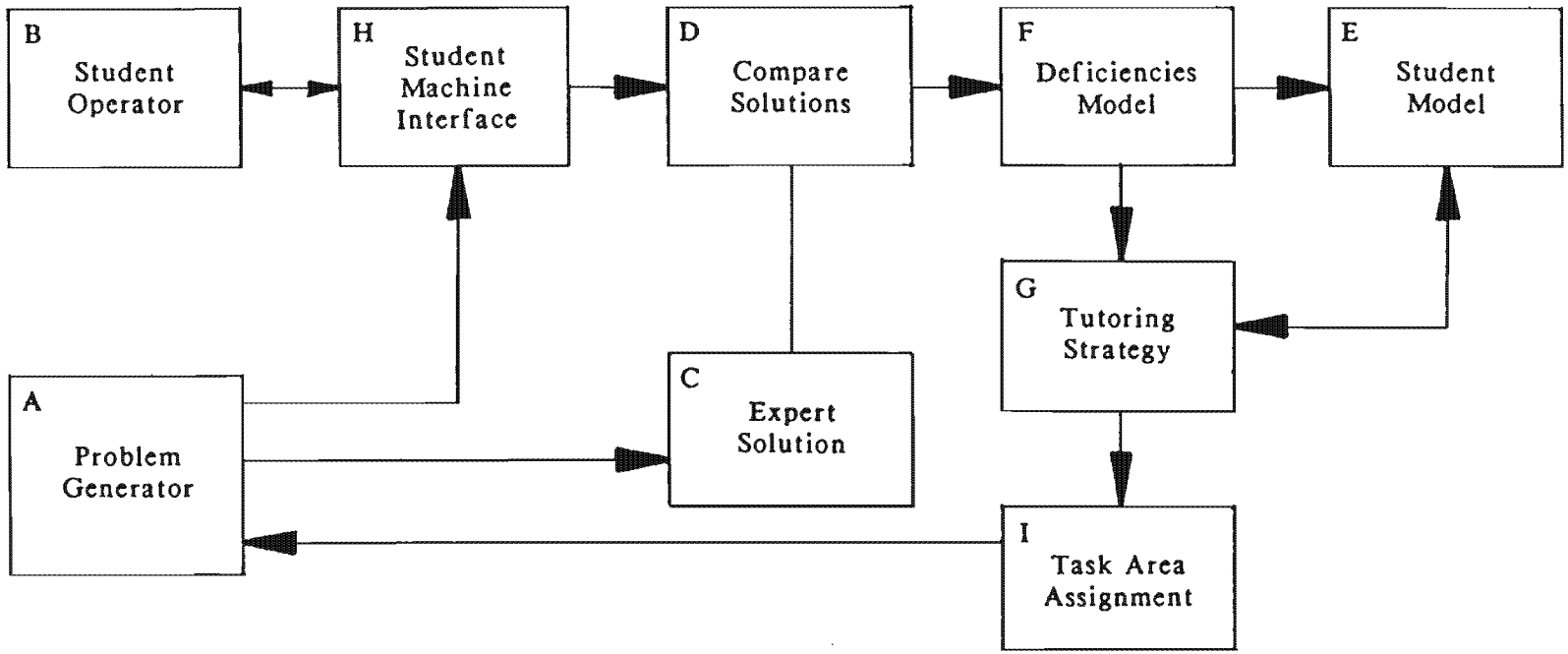

Figure 1. The "Intettigent Operator Assistant Functional Model." GIST will supply the tutoring strategy indicated in box G. (source: U.S. Army Missile Command)

The following features are characteristic of mastery learning models:

Learning objectives are carefully specified; instruction is analyzed and broken down into discrete units;

Pre-skills are tested to ensure proper student placement;

Effective, efficient communications are developed to teach each objective;

Students are allowed to master material at their own pace;

Frequent, ungraded tests monitor the student's progress, and provide feedback;

Corrective/remedial procedures are employed when needed;

Sub-skills are taught to mastery;

There is testing for mastery for long-term objectives.

In addition to these general mastery learning model features, a Direct Instruction analysis of cognitive knowledge provides a taxonomy that matches cognitive knowledge structures with optimal communications rules for each knowledge structure.

DIRECT INSTRUCTION ANALYSIS

Direct Instruction begins with an assumption that the environment is the primary variable that accounts for what a learner learns. Typically, when students do not learn what is expected, the focus of attention is on students -- their motivation, study habits, abilities, dis-abilities, etc. Direct Instruction theory focuses attention on the instruction, or communication, students receive.

For example, in introducing a new concept to a student, did the instruction present a selection of positive examples that adequately demonstrated the range of the concept? Did the instruction present a selection of negative examples that adequately demonstrated the boundary of the concept? Was the instruction efficient?

A Direct Instruction analysis of communications seeks principles for the logical design of teaching sequences that effectively transmit knowledge. Such teaching sequences also minimize the learning of misrules, over-generalizations, and under-generalizations.

Direct Instruction theory provides a method of analyzing cognitive knowledge to determine effective communications rules/formulas for presenting that knowledge. A Direct Instruction analysis of cognitive knowledge results in a taxonomy of knowledge structures ranging from basic concepts (such as the meaning of the word "red," or the word "under") to complex forms of knowledge (such as the complex decision-making processes required in military simulations). Each knowledge structure is associated with communications rules/formulas that effectively communicate that knowledge.

We selected Direct Instruction theory because it offers a single, integrated and coherent model of instruction. Its mastery learning model is suitable for teaching weapon system skills and its communications/teaching rules are clearly stated. Direct Instruction analysis of cognitive knowledge provides us with a method for separating instructional and domain knowledge.

The knowledge domain in this study is a weapon system simulation. Weapon system simulations have the following characteristics:

Weapon systems operators must make decisions in a complex environment with many variables that change and interact frequently;

The complex environment of the weapon system operator can be broken down into basic facts, concepts, and operations;

Initial instruction (pre-teaching) can provide the weapon system operator with a mastery of the basic facts, concepts, and operations;

The weapon system operator can be systematically guided through a carefully designed sequence of instruction that requires the application of basic facts, concepts, and operations to problem-solving situations of ever-increasing complexity;

Carefully grounding the weapon system operator in fundamentals, and providing guidance through problem-solving situations of ever-increasing complexity, promotes generalization of problem-solving/decision-making skills to the "real world."

Our Direct Instruction analysis of this knowledge resulted in instruction that consists of "cognitive routines" embedded in a "fact system" (explained in the following sections). The instruction teaches the elements and relationships of the fact system, and the cognitive routines necessary for mastery of each level of the simulation. Communication rule models provide the communications interface for domain and instructional knowledge (see Figure 2).

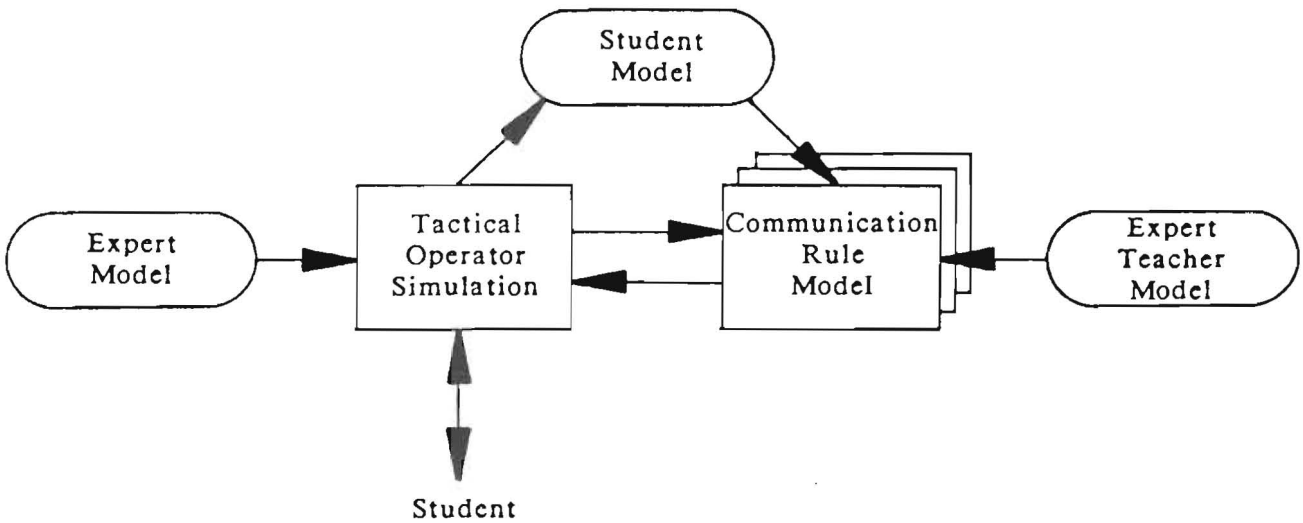

Figure 2. Expert system architecture of the intelligent tutoring system prototype. Logical communication of domain (simulation) and teaching knowledge is accomplished through the communication rule model.

FACT SYSTEMS

A fact system is a set of elements and the relationships among them that create a "unique whole." For example, the elements and relationships among the elements of a factory (see Figure 3) comprise a fact system. The "world" of the weapon system operator is a fact system.

To teach a fact system to a learner, we convey the individual facts, and the relationships among them. In particular, we teach those facts and relationships that distinguish this fact system from other possible fact systems. The primary objective of instruction is not to teach the meaning of the individual facts, but to teach the fact system as the sum of the component facts.

Simulations are fact systems that represent a restricted set of essential features from real life situations. The fact system taught in our intelligent tutoring system prototype simulates the "world" of a weapon system operator, with elements such as a radar screen, objects travelling across the screen, object status information, and various relationships among these elements. Cognitive routines define relationships among some of the elements in our intelligent tutoring system prototype.

HOW A FACTORY WORKS

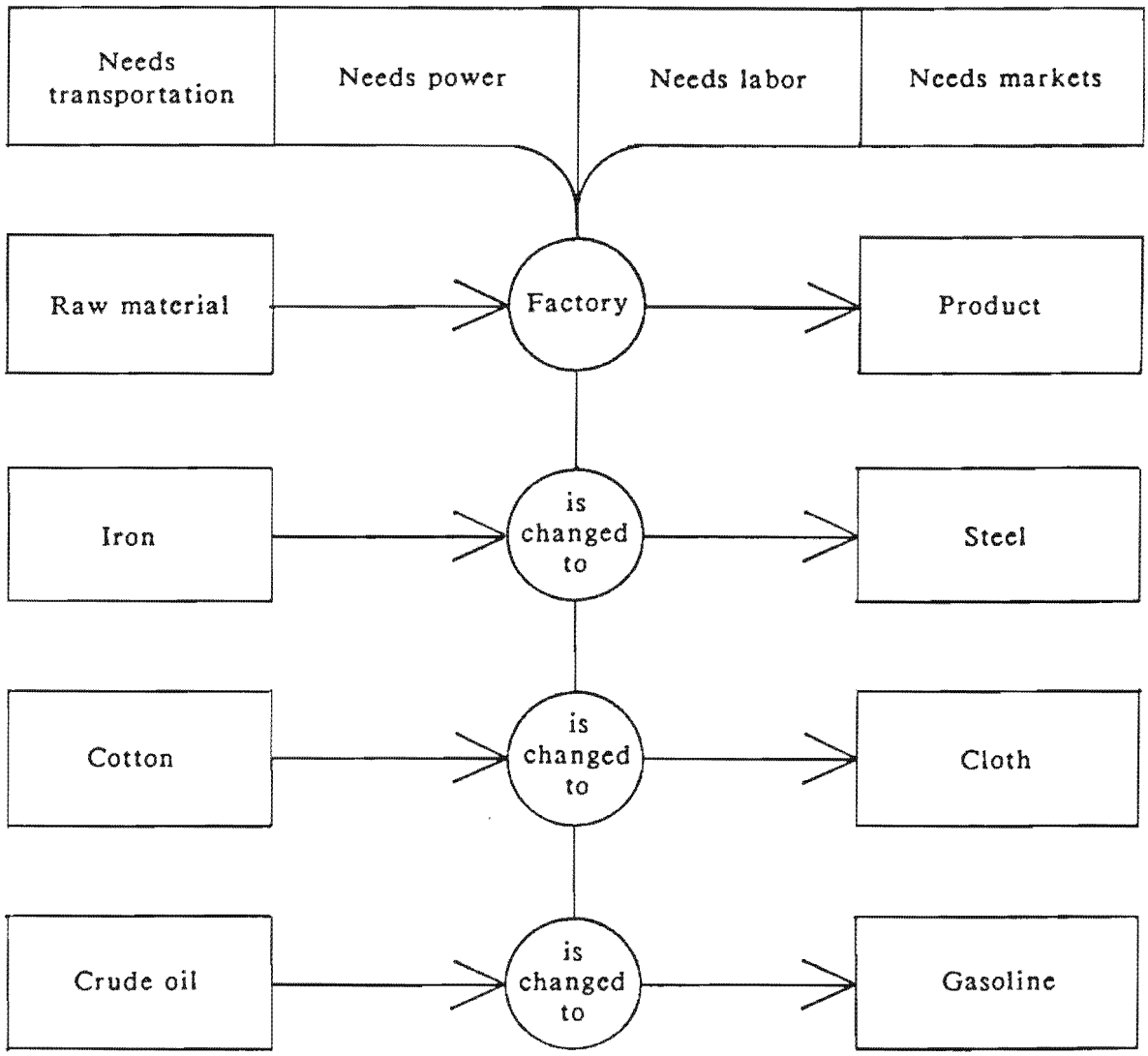

Figure 3. The "fact system" of a particular type of factory. The various elements, as well as the relationships among them, are represented.

COGNITIVE ROUTINES

A cognitive problem-solving routine (cognitive routine, for short) is a step-by-step solution algorithm to a task. Figure 4 illustrates a cognitive routine that teaches the learner to solve problems of the type x - y = ?, where x and y are positive whole numbers less than 20, and x > y (for example, 5 - 3 = ?). In our intelligent tutoring system prototype, the operator learns several cognitive routines that specify the criteria for determining whether or not to destroy objects that appear on a radar screen.

To teach a cognitive routine, we design tasks that make all necessary steps leading to the desired outcome overt. In Figure 4, the learner must make an overt response on each step of the routine. If the learner makes a mistake, we know exactly what it is, and can therefore provide the appropriate remedial instruction. In designing a cognitive routine, we carefully define the range of examples that the routine is designed to process. We design tasks that test the student's application of each component of the routine as well as the application of the routine in its entirety.

Teacher 5−3=?	Learner
1. Read it.	Five minus three equals how many?
2. (touches under 5) What does this tell us?	Start with five.
3. Do it.	(learner makes 5 lines:) 5−3=? /////
4. (points to -3) What does this tell us?	Minus three.
5. Do it.	(learner crosses out 3 lines:) 5−3=? ~~///~~//
6. (points to equal sign) What does this tell us?	We must have the same number on both sides.
7. What number is that?	Two.
8. Make the sides equal.	(learner makes lines and writes answer:) 5−3=2 ~~///~~// //
9. Read the problem and the answer.	Five minus three equals two.

Figure 4. A "cognitive routine" for teaching subtraction problems. Each step of the routine requires an overt response from the student.

The "rules" of the simulation are derived from the cognitive routine. An operator can succeed by applying an algorithmic solution. Cognitive routines teach problems that can be solved algorithmically, or as a series of steps. Together, these cognitive routines form the fact system for the weapon system.

In the intelligent tutoring system prototype, the student learns to apply the following routine:

1. Is there an unidentified object in the critical area?

   YES

   Initiate "destroy routine."

   NO

   Examine the next criterion.

2. Is there a friendly object in the critical area?

   YES

2a. Is this the object's second move in the critical area?

YES

Initiate "destroy routine."

NO

Examine the next criterion.

3. Is there a high speed object anywhere on the screen?

YES

Initiate "destroy routine."

NO

Examine the next criterion.

4. Proceed to the next move.

The routine is taught in seven levels. Each level consists of one or more of the elements in the routine above. If we let "UN" represent an unidentified object, "FR" a friendly object, and "HS" a high speed object, the following indicates which elements are taught at each level.
Level

Level	Routine Element(s)
1	UN
2	FR
3	UN, FR
4	HS
5	UN, HS
6	FR, HS
7	UN, FR, HS

Levels 1, 2, and 4 pre-teach single steps. It is important, in cognitive routines, that students master individual components of a routine before proceeding to more complex steps. A practice strategy is incorporated in this cognitive routine that accomplishes this. If students make a mistake on a given level, they are recycled through all individual components of that level (levels 1, 2, and/or 4), and then brought back to the level where they made the mistake.

For example, if students make a mistake on level 5 (UN, HS), they are brought back to level 1 (UN). After successful completion of level 1, they go to level 4 (HS). After successful completion of level 4, they return to level 5 again. If students make an error on levels 1 or 4, they repeat that level until they are successful. In this manner, the students master the components of each level before proceeding to more advanced levels.

This review strategy was based on a drill paradigm called the Corrective Feedback Paradigm (Siegel & Misselt, 1984). The Corrective Feedback Paradigm provides a sophisticated review schedule for items missed in computerized drills.

For example, in a 1-later, 3-later, 5-later review schedule (see Figure 5), a missed item appears immediately after it is missed. Then, if the student is successful, it appears again three items later. If the student is successful again, it appears five items later. If the student misses any of the review items, the 1-3-5 later review begins again, at that point. The Corrective Feedback Paradigm has been used successfully in a number of instructional design projects (Alessi, Siegel, & Silver, 1982; Siegel, 1978, 1978-1979, 1983) and is an integral part of a comprehensive computer-based tutorial model developed by Dixon and Clapp (1983).

The successful combination of cognitive routine strategies and the Corrective Feedback Paradigm was previously demonstrated on the PLATO computer-based education system (Smith & Sherwood, 1976) in a mathematics lesson that taught parabolic equations (Sfondilias, 1986).

THE INSTRUCTIONAL CALCULUS

The Instructional Calculus supplies a methodology for integrating Direct Instruction strategies with expert system technology. It describes a process for designing and creating both the instructional and AI components of the intelligent tutoring system. We call it a calculus because it specifies a method and logic for solving instructional problems. The Instructional Calculus consists of these components:

* Direct Instruction analysis of cognitive knowledge.
* Identification of communication rules for each knowledge structure.
* Building of communication rule models.
* Individualization design.

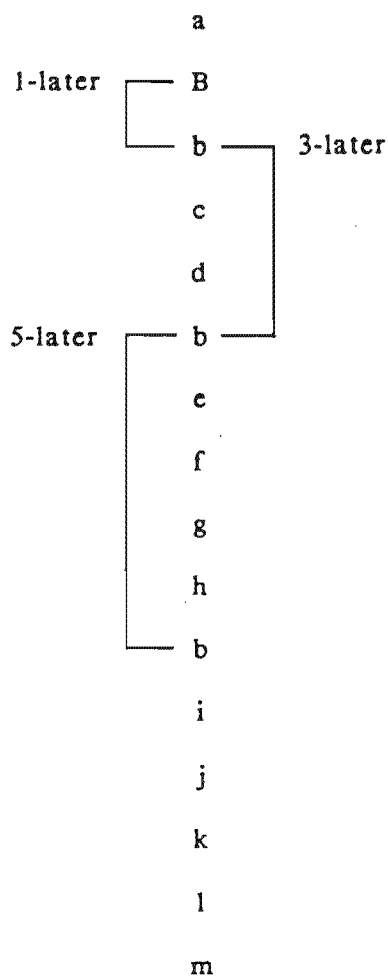

Figure 5. Review of a missed item in a Corrective Feedback Paradigm drill. The upper-case "B" is the missed item. Each lower-case "b" is a correct response to the 1-3-5 later review schedule.

Direct Instruction analysis of cognitive knowledge provides the basis for separating domain and instructional knowledge in our intelligent tutoring system. Classifying domain knowledge according to its structural characteristics allows selection of effective communication rules for each knowledge structure type. This establishes the instructional basis of the intelligent tutoring system.

Communication rule (CR) models (see Figure 2) implement the domain knowledge/instructional knowledge interaction in the expert system. CR models contain procedures that effectively communicate the generalizations embodied in the domain knowledge itself. There is a model for each knowledge structure/communication rule pair. CR models provide the logical interface between domain and instructional knowledge.

To individualize instruction for each student, the communication rule model can access student model data. The CR model can be designed to modify its rules according to prior student performance. A CR model that contains a cognitive routine could be designed to monitor student performance and optimize the routine for each student. For example, a performance failure at step 3 in the cognitive routine of Figure 4 would initiate a CR model on "making lines from numerals."

In this research, we apply the Instructional Calculus to simulation training. Simulations present complex real-time situations where events happen in unanticipated sequences and combinations. To teach a simulation, we begin by instructing students in simple cases of the simulation and gradually increase complexity until the student can interact successfully with the full simulation. Our intelligent tutoring system prototype demonstrated a communication rule model that accomplished this.

Simulations can be decomposed into components that can be taught with Direct Instruction strategies, such as fact systems and cognitive routines. Simulations, or scenarios, can be distinguished from each other by the interaction and sequencing of their components. As we apply the Instructional Calculus to the development of actual embedded weapon system training, we will build a repertoire of communication rule models representing various types of simulation.

We follow these general guidelines in designing communication rule models:

* Domain/instructional communication parameters must be generic; the simualtion translates these into domain-specific concepts;

* A CR model contains rules and strategies for only one knowledge structure; multiple knowledge structures require multiple CR models;

* CR models can be designed to utilize student model performance data to customize the instruction each student receives;

* CR model design is not bound to any AI language or expert system shell; implementation of a CR model should take advantage or a particular language or shell's strength.

As the repertoire of CR models grows, we will develop meta-rules and meta-strategies that allow the expert teacher model to control instruction at a higher level. The expert teacher model will need to create and deliver programs of instruction for students, consisting of sequences of simulations and associated sets of communication rules. Our intelligent tutoring system prototype demonstrated the implementation of mastery instruction for one simulation. The embedded intelligent tutor in a weapon system will manage an operator's entire instructional program.

Conclusion

In this research, we addressed the problem of "how shall we teach?" We demonstrated the feasibility of implementing a mastery model of instruction in an intelligent tutoring system. The skills of weapon systems operators can be maintained through mastery instruction. In future research, we plan to expand the repertoire of communication rule models based on a Direct Instruction analysis of cognitive knowledge. As we progress, we plan to build more intelligence into our expert teacher models in the form of meta-rules and meta-strategies that can manage complete programs of instruction.

References

Alessi, S.M., Siegel, M.A., & Silver, D.Z. (1982). Effectiveness of a computer-based reading comprehension program for adults. Journal of Educational Technology Systems, 11(1), 43-57.

Brown, J.S., & Burton, R.R. (1978). Diagnostic models for procedural bugs in basic mathematical skills. Cognitive Science, 2, 155-192.

Buchanan, B.G., & Shortliffe, E.H. (1984). Rule-based expert systems: The MYCIN experiments of the Stanford heuristic programming project. Reading MA: Addison-Wesley Publishing Company.

Clancey, W. (1979). Tutoring rules for guiding a case method dialogue. International Journal of Man-Machine Studies, 11.

Englemann, S., & Carnine, D. (1982). Theory of instruction: Principles and applications. New York: Irvington.

Sfondilias, J.S. (1986). The effects of combining a cognitive routine strategy and the corrective feedback paradigm in a computer-based lesson. Doctoral thesis, University of Illinois, Urbana, IL.

Shortliffe, E.H. (1976). Computer-based medical consultations: MYCIN. New York: American Elsevier Publishing Co., Inc.

Siegel, M.A. (1978). Computer-based education has been introduced in three Illinois prisons. American Journal of Correction, 40(1).

Siegel, M.A. (1978-79). Computer-based education in prison schools. Journal of Educational Technology Systems. 7(3), 239-256.

Siegel, M.A. (1983). PLATO education group: Summary of activities 1982-83 (CERL Report E-24). Urbana, IL: University of Illinois, Computer-based Education Research Laboratory.

Siegel, M.A., & Misselt, A.L. (1984). Adaptive feedback and review paradigm for computer-based drills. Journal of Educational Psychology, 76(2), 310-317.

Smith, S.G., & Sherwood, B.A. (1976). Educational uses of the PLATO computer system. Science, 192, 344-352.

Woolf, B., & McDonald, D.D. (1984, September) Building a computer tutor: Design issues. IEEE Computer Society, 17(9), 61-72.